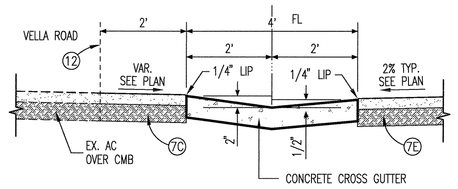

1E MODIFIED "D1" CROSS GUTTER
CITY STD. DWG. NO. 200
NTS

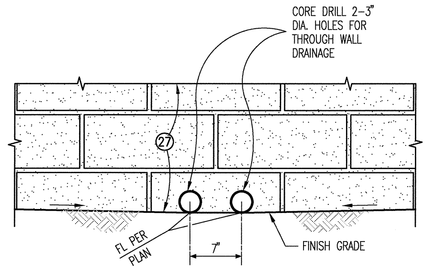

2A THROUGH WALL DRAINAGE TYPE "B"
NTS

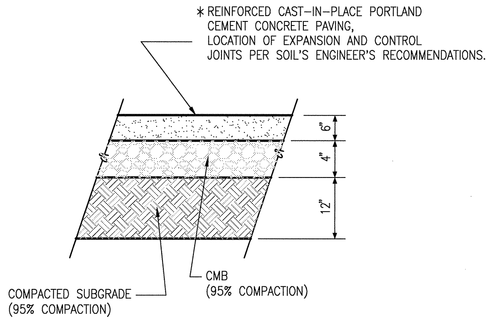

7B 6" THICK CONCRETE PAVEMENT
ALSO SEE SOIL ENGINEER'S SPECIFICATIONS
* CONCRETE REINFORCED WITH 6"X6" 10/10 WWM CENTERED IN SLAB
NTS

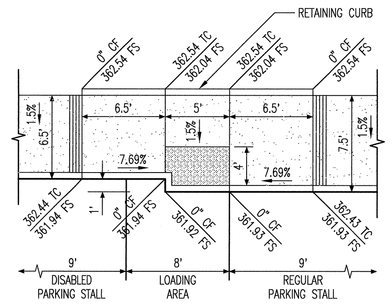

9A MODIFIED CASE "B" CURB RAMP
CITY STD. DWG. NO. 213
NTS

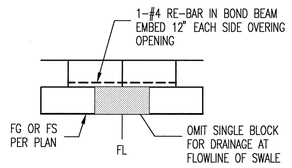

18 THROUGH WALL DRAINAGE TYPE "A"
NTS

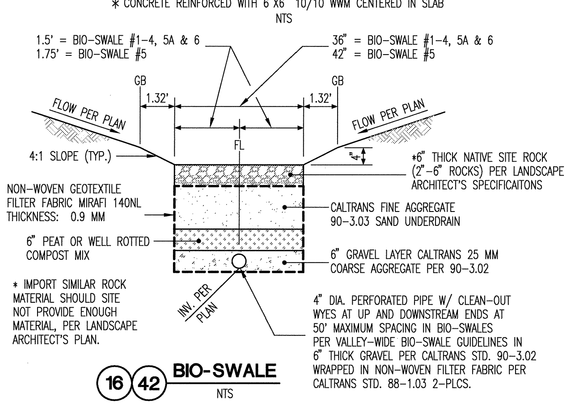

16 42 BIO-SWALE
NTS

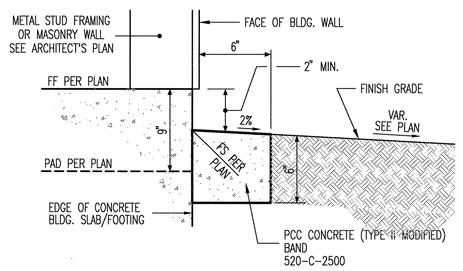

19 CONCRETE BAND
NTS

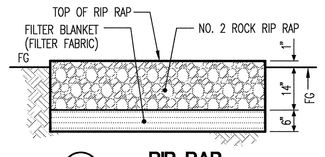

38 RIP RAP
WIDTH = 2.5', LENGTH = 10'
OR AS SHOWN ON PLAN
RIP RAP TEXTURE AND COLOR TO MATCH BIO-SWALE ROCK
NTS

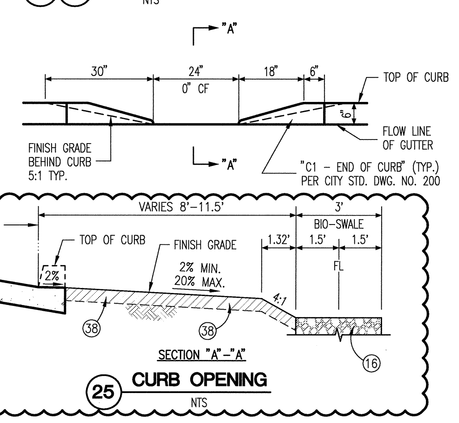

25 CURB OPENING
NTS

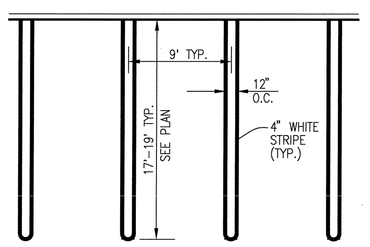

80 PARKING STRIPE (DOUBLE HAIRPIN)
NTS

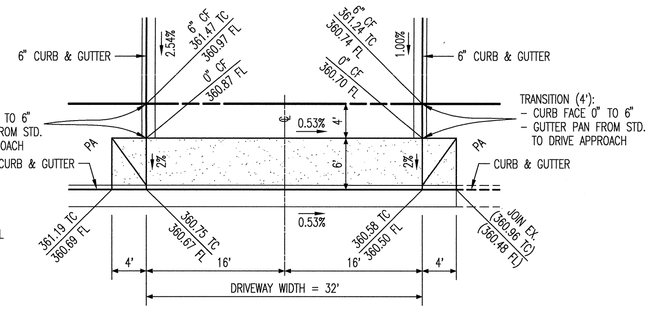

10 MODIFIED DRIVEWAY APPROACH
CITY STD. DWG. NO. 201
SCALE: 1"=10'

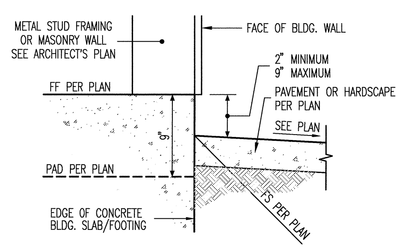

TYPICAL GRADING DETAIL
HARDSCAPE
NTS

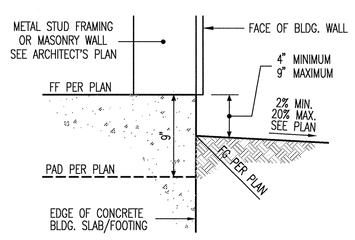

TYPICAL GRADING DETAIL
SOFTSCAPE
NTS

CONSTRUCTION NOTES & ESTIMATED QUANTITIES

#	PRIVATE PRECISE PAVING, GRADING & DRAINAGE IMPROVEMENT PLAN	UNIT	QUANTITY
1A.	CONSTRUCT "A1" CURB ONLY PER CITY STD. DWG. NO. 200	LF	817
1B.	CONSTRUCT "B1" CURB & GUTTER PER CITY STD. DWG. NO. 200	LF	335
1C.	CONSTRUCT "A3" CURB & GUTTER PER CITY STD. DWG. NO. 200	LF	23
1D.	CONSTRUCT "B2" CROSS GUTTER PER CITY STD. DWG. NO. 200	LF	121
1E.	CONSTRUCT MODIFIED "D1" CROSS GUTTER PER CITY STD. DWG. NO. 200 & DET. THIS SHT.	LF	146
1F.	CONSTRUCT CURB ONLY TRANSITION FROM 6" TO 0" CURB FACE (LENGTH PER PLAN)	LF	29
1G.	CONSTRUCT MODIFIED "A1" CURB ONLY (0" CURB FACE) PER CITY STD. DWG. NO. 200	LF	16
1H.	CONSTRUCT 12" WIDE CONCRETE APRON AT GRATE INLET (6" THICK PCC CONCRETE OVER 4" CMB) PER DET. SHT. NO. 4	SF	8
1J.	CONSTRUCT MODIFIED "A1" CURB ONLY (4" CURB FACE) PER CITY STD. DWG. NO. 200	LF	53
1K.	CONSTRUCT CURB ONLY TRANSITION FROM 4" TO 0" CURB FACE (LENGTH PER PLAN)	LF	71
2.	REMOVE EXISTING TREE PER LANDSCAPE ARCHITECT'S RECOMMENDATIONS; CONTRACTOR TO VERIFY EXISTING LOCATION OF TREE AND VERIFY REMOVAL WITH LANDSCAPE ARCHITECT PRIOR TO CONSTRUCTION	EA	5
2A.	CONSTRUCT THROUGH WALL DRAINAGE (TYPE "B") PER DET. THIS SHT.	EA	12
3A.	ADJUST STORM DRAIN CLEAN OUT TO GRADE	EA	6
3B.	ADJUST STORM DRAIN MANHOLE TO GRADE	EA	1
4A.	ADJUST SEWER CLEAN OUT TO GRADE	EA	11
4B.	ADJUST SEWER MANHOLE TO GRADE	EA	1
5.	ADJUST WATER VALVE TO GRADE	EA	3
6A.	INSTALL TRUNCATED DOMES PER CALTRANS STD. DWG. NO. A88A	SF	102
6B.	INSTALL 12" GROOVED BAND PER CITY STD. DWG. NO. 212	LF	38
6C.	INSTALL 6" X 6" CONCRETE BAND ADJACENT TO SIDE OF TRUNCATED DOMES	LF	9
7A.	CONSTRUCT 2.5" AC OVER 4" CMB	SF	13,424
7B.	CONSTRUCT 6" THICK CONCRETE PAVEMENT PER DET. THIS SHT.	SF	2,848
7C.	REMOVE AND REPLACE EXISTING AC OVER CMB IN KIND PER CITY STD. DWG. NO. 115	SF	417
7D.	CONSTRUCT ENHANCED PAVEMENT PER LANDSCAPE ARCHITECT'S PLAN (CONCRETE PAVERS)	SF	1,404
7E.	CONSTRUCT PERMEABLE PAVERS PER DET. SHT. NO. 1	SF	2,236
8.	CONSTRUCT SIDEWALK PER CITY STD. DWG. NO. 210 (WIDTH PER PLAN) & LANDSCAPE ARCHITECT'S PLAN (BROOM FINISH, STANDARD GRAY COLOR)	SF	3,310
8A.	CONSTRUCT 18" WIDE CONCRETE BAND PER DET. SHT. NO. 1	SF	265
9A.	CONSTRUCT MODIFIED CURB RAMP CASE "B" PER CITY STD. DWG. NO. 213 & DET. THIS SHT. (TRUNCATED DOMES PER CALTRANS STD. DWG. NO. A88A)	SF	141
9B.	CONSTRUCT CURB RAMP CASE "B" PER CITY STD. DWG. NO. 213 (TRUNCATED DOMES PER CALTRANS STD. DWG. NO. A88A)	SF	119
9C.	CONSTRUCT CURB RAMP CASE "B" PER CITY STD. DWG. NO. 213 (NO RETAINING CURB) (TRUNCATED DOMES PER CALTRANS STD. DWG. NO. A88A)	SF	141
10.	CONSTRUCT MODIFIED DRIVEWAY APPROACH PER CITY STD. DWG. NO. 201 & DET. THIS SHT.	SF	320
11.	CONSTRUCT MASONRY RETAINING WALL PER SEPARATE PERMIT (PER STRUCTURAL ENGINEER'S PLAN) (CONTRACTOR TO VERIFY RETAINING WALL LAYOUT/GRADES WITH EXISTING TREES PRIOR TO CONSTRUCTION, WHERE APPLICABLE)	SF	250
12.	CONSTRUCT SAWCUT LINE (2" MIN. WHERE APPLICABLE)	LF	218
13.	CONSTRUCT SIDEWALK PER CITY STD. DWG. NO. 210 (WIDTH PER PLAN) & LANDSCAPE ARCHITECT'S PLAN (SAND/ACID FINISH, RUSTIC BROWN #6058 DAVIS COLOR)	SF	12,834
14.	CONSTRUCT STAIRS PER LANDSCAPE ARCHITECT'S PLAN	LF	170
15.	CONSTRUCT DECOMPOSED GRANITE PATHWAY (STABILIZED) PER LANDSCAPE ARCHITECT'S PLAN	SF	1,013
16.	CONSTRUCT BIO-SWALE PER DET. THIS SHT.	LF	566
17.	CONSTRUCT COMBINATION MASONRY GARDEN WALL / PICKET FENCE PER SEPARATE PERMIT (PER STRUCTURAL ENGINEER'S PLAN)	LF	236
18.	CONSTRUCT THROUGH WALL DRAINAGE (TYPE "A") PER DET. THIS SHT.	EA	2
19.	CONSTRUCT CONCRETE BAND PER DET. THIS SHT.	LF	276
20.	CONSTRUCT CURB DEPRESSION PER DET. SHT. NO. 1	EA	1
21.	CONSTRUCT CURB RAMP CASE "I" PER CALTRANS STD. DWG. NO. A88A	SF	46
22.	REMOVE EXISTING CURB & GUTTER	LF	209
23.	CONSTRUCT CONCRETE RETAINING WALL PER SEPARATE PERMIT (PER STRUCTURAL ENGINEER'S PLAN)	SF	3,209
24.	CONSTRUCT MASONRY SCREEN WALL PER SEPARATE PERMIT (PER STRUCTURAL ENGINEER'S PLAN)	SF	3,985
25.	CONSTRUCT CURB OPENING PER DET. THIS SHT.	EA	3
26.	REMOVE EXISTING CHAINLINK FENCE	LF	718
27.	REMOVE EXISTING CONCRETE MOW STRIP	LF	68

#	PRIVATE STORM DRAIN IMPROVEMENT PLAN	UNIT	QUANTITY
28.	CONSTRUCT STORM DRAIN PIPE THROUGH CONCRETE WALL PER DET. SHT. NO. 5	EA	3
29.	CONSTRUCT CURB CORE PER DET. SHT. NO. 1	EA	2
30.	INSTALL ADS HDPE N-12 4" STORM DRAIN PIPE	LF	807
31.	INSTALL ADS HDPE N-12 6" STORM DRAIN PIPE	LF	173
32.	INSTALL ADS HDPE N-12 8" STORM DRAIN PIPE	LF	338
33.	INSTALL 4" PVC SCH. 40 STORM DRAIN PIPE	LF	59
34.	INSTALL ADS HDPE N-12 12" STORM DRAIN PIPE	LF	176
35.	INSTALL JUNCTION STRUCTURE NO. 2 PER RCFC&WCD STD. JS227	EA	1
36.	INSTALL 18" RCP STORM DRAIN (D-LOAD=2000)	LF	15
37.	INSTALL MANHOLE PER APWA STD. 321-1	EA	1
38.	INSTALL RIP RAP PER DET. THIS SHT.	CF	218
39.	INSTALL 4" NDS BLACK ATRIUM GRATE (PART NO. 78)	EA	8
40.	INSTALL 6" NDS BLACK ATRIUM GRATE (PART NO. 90) WITH SPEED-D BASIN	EA	7
41.	INSTALL JENSEN 24" DROP INLET (DI2424) WITH PEDESRTIAN GRATE	EA	3
42.	INSTALL ADS HDPE N-12 4" PERFORATED STORM DRAIN PIPE PER DET. THIS SHT.	LF	561
43.	INSTALL 6" NDS BLACK ATRIUM GRATE (PART NO. 90)	EA	10
44.	INSTALL JENSEN 18" GRATE INLET (DI1818) WITH TRAFFIC GRATE	EA	1
45.	INSTALL NDS GREEN 12" SQUARE GRATE (PART NO. 1212) WITH LOW PROFILE ADPATER (PART NO. 1221 - 8" PIPE CONNECTION)	EA	1
46.	INSTALL WATER-TIGHT PVC CAP	EA	7
47.	INSTALL 6" CLEANOUT WITH BLACK PLASTIC COVER	EA	3
48.	INSTALL ADS HDPE N-12 10" STORM DRAIN PIPE	LF	231
49.	INSTALL JENSEN 36" GRATE INLET (DI3636) WITH PEDESTRIAN GRATE	EA	1
50.	CONSTRUCT CONCRETE PIPE ENCASEMENT, 8" THICK (L=6')	EA	3
51.	CONSTRUCT PIPE CROSSING WITH MASONRY WALL FOOTING PER DET. SHT. NO. 8	EA	2
95.	INSTALL 6" CLEANOUT WITH CAST IRON COVER	EA	2

#	PRIVATE SEWER IMPROVEMENT PLAN	UNIT	QUANTITY
52.	CONSTRUCT 8" SCH. 40 PVC SEWER MAIN	LF	555
53.	CONSTRUCT 6" SCH. 40 PVC SEWER MAIN	LF	152
54.	CONSTRUCT 4" SCH. 40 PVC SEWER MAIN	LF	210
55.	CONSTRUCT 6" SCH. 40 PVC SEWER CLEANOUT PER CITY STD. NO. 401	EA	7
56.	CONSTRUCT 8"x8" SCH. 40 PVC SEWER WYE	EA	1
57.	CONSTRUCT 8"x6" SCH. 40 PVC SEWER WYE	EA	2
58.	CONSTRUCT 8"x4" SCH. 40 PVC SEWER WYE	EA	1
59.	CONSTRUCT 6"x4" SCH. 40 PVC SEWER WYE	EA	1
60.	CONSTRUCT 4"x4" SCH. 40 PVC SEWER WYE	EA	1
61.	CONSTRUCT 4" SCH. 40 PVC SEWER CLEANOUT PER CITY STD. NO. 401	EA	1
62.	CONSTRUCT 8" VCP SEWER	LF	36
63.	TRENCH AND PAVEMENT REPLACEMENT PER CITY STD. NO. 115	SF	312
64.	AND DAMAGED CURB & GUTTER, SIDEWALK TO BE REPLACE IN KIND	LF	10
65.	CONSTRUCT 48" DIA. SEWER MANHOLE PER CITY STD. NO. 403	EA	1
66.	CONSTRUCT BLANKET PROTECTION FOR SEWER LATERAL PER APWA STD. DWG. NO. 225-1	EA	2

#	PRIVATE RECLAIMED WATER IMPROVEMENT PLAN	UNIT	QUANTITY
70.	HOTTAP EXISTING 4" PVC RECLAIMED WATER MAIN	EA	1
71.	INSTALL 4" DIP GATE VALVE	EA	1
72.	INSTALL 4" SDR 21 PVC RECLAIMED WATER MAIN (PURPLE PIPE)	LF	379
73.	INSTALL 4"x90° SDR 21 PVC RECLAIMED WATER ELBOW	EA	4
74.	INSTALL 2 1/2" COMBINATION METER/PRESSURE REGULATOR	EA	1
75.	INSTALL 2 1/2" SDR 21 PVC RECLAIMED WATER MAIN (PURPLE PIPE)	LF	26
76.	INSTALL 2 1/2"x 2 1/2"x 2" SDR 21 PVC TEE	EA	1
77.	INSTALL 2 1/2"x2" SDR 21 PVC REDUCER	EA	1
78.	INSTALL 2" SDR 21 PVC RECLAIMED WATER MAIN (PURPLE PIPE)	LF	225
79.	INSTALL 2 1/2"x45° SDR 21 PVC RECLAIMED WATER ELBOW	EA	3
80.	INSTALL 2"x45° SDR 21 PVC RECLAIMED WATER ELBOW	EA	7
81.	INSTALL 2"x90° SDR 21 PVC RECLAIMED WATER ELBOW	EA	1

#	PRIVATE SIGNING & STRIPING IMPROVEMENT PLAN	UNIT	QUANTITY
80.	INSTALL 4" WHITE PARKING STRIPE PER DET. THIS SHT. (DOUBLE HAIR-PIN)	LF	970
81.	INSTALL 4" SINGLE BLUE PARKING STRIPE	LF	123
82.	INSTALL DISABLED PARKING SYMBOL PER CALTRANS STD. DWG. NO. A24C	EA	4
83.	STENCIL "NO PARKING" IN 12" (H) WHITE LETTERING	EA	4
84.	INSTALL R99 (CA) SIGN PER CA MUTCD AND DETAIL ON SHEET 4	EA	4
85.	INSTALL R100B (CA) SIGN PER CA MUTCD AND DETAIL ON SHEET 4	EA	1
86.	INSTALL SIGN POST PER CITY STD. DWG. NO. 264	EA	6
87.	INSTALL R1-1 SIGN PER CA MUTCD AND DETAIL ON SHEET 4	EA	1
88.	STENCIL "STOP" PER CALTRANS STD. DWG. NO. A24D	EA	1
89.	INSTALL 12" STOP BAR STRIPE PER CALTRANS STD. DWG. NO. A24E	EA	1
90.	INSTALL R7-8B SIGN PER CA MUTCD AND DETAIL ON SHEET 4	EA	2
91.	INSTALL RED FIRE ACCESS LANE PAINTING ON CURB PER CITY STD.	LF	498
92.	REMOVE AND RELOCATE EXISTING STOP SIGN AND POST	EA	1
93.	INSTALL BLUE FIRE HYDRANT MARKER PER CITY STD.	EA	1

NOTES

1. EXISTING UTILITY POLE TO BE PROTECTED IN PLACE. PRIOR TO CONSTRUCTION OF PROPOSED SIDEWALK CONTRACTOR TO VERIFY MINIMUM 4' CLEAR WIDTH FOR ADA ACCESSIBILITY WITH EXISTING POLE.
2. EXISTING STORM DRAIN MANHOLE WITH CONCRETE PAD PROTECT IN PLACE
3. PROTECT EXISTING CURB RAMP IN PLACE
4. PROPOSED FENCE PER LANDSCAPE ARCHITECT'S PLAN
5. PROPOSED STORAGE UNIT (8'W X 40'L) PER ARCHITECT'S PLAN. LAYOUT AND GRADES TO BE VERIFIED IN THE FIELD PRIOR TO CONSTRUCTION.
6. ENTRY VEHICULAR GATE PER LANDSCAPE ARCHITECT'S PLAN
7. MAN GATE PER LANDSCAPE ARCHITECT'S PLAN
8. PROPOSED SEWER TRENCH DRAIN PER PLUMBING ENGINEER' SPLAN
9. PROPOSED KENNEL PER ARCHITECT'S PLAN
10. PROPOSED DOG ACQUANTANCE AREA
11. LIMITS OF BUILDING ROOF
12. EXISTING TREE(S) PROTECT IN PLACE PER LANDSCAPE ARCHITECT'S RECOMMENDATIONS
13. TRASH ENCLOSURE PER ARCHITECT'S PLAN
14. FREEZER PER ARCHITECT'S PLAN
15. FUTURE CREMATORY PER ARCHITECT'S PLAN
16. HARDSCAPE PER ARCHITECT'S PLAN
17. GATES PER ARCHITECT'S PLAN
18. PROPOSED PROTECTION BOLLARDS PER ARCHITECT'S PLAN
19. PROPOSED CONCRETE RETAINING PLANTER WALL BRIDGING OVER EXISTING 18" STORM DRAIN PIPE PER STRUCTURAL'S ENGINEER'S PLAN
20. PROPOSED ELECTRICAL ENCLOSURE PER ARCHITECT'S PLAN
21. BUILDING ROOF DRAIN CONNECTION
22. PLANTER RETAINING WALL SUB-SURFACE DRAIN LINE CONNECTION

REGISTERED PROFESSIONAL ENGINEER JOHN M. BRUDIN No. 41836 Exp. 3-31-10 CIVIL STATE OF CALIFORNIA

REGISTERED PROFESSIONAL ENGINEER STANLEY C. MORSE No. 20596 Exp. 9-30-11 CIVIL STATE OF CALIFORNIA

BENCH MARK	ELEV.
CANCER	365.700

LOCATION
2 1/2" BRONZE DISC STAMPED "C.P.S. B.M. CANCER RESET 1979", SET IN NORTHEAST CORNER OF WALKWAY AT THE ADMINISTRATION BUILDING OF THE WASTE WATER TREATMENT PLANT.

NO.	REVISION	APPROVED	DATE

CITY CHECK

DATE

REVIEWED BY: JOHN M. BRUDIN — R.C.E. NO. / EXP. DATE 41836 3/31/10 — DATE

APPROVED BY: DAVID J. BARAKIAN — R.C.E. NO. / EXP. DATE 28931 3/31/11 — DATE

PREPARED UNDER THE SUPERVISION OF: STANLEY C. MORSE — R.C.E. NO. / EXP. DATE 20596 9/30/11 — DATE 1/27/10

MDS CONSULTING
MORSE SCHULTZ
PLANNERS ENGINEERS SURVEYORS
78-900 Avenue 47, Suite 208
La Quinta, CA 92253
Voice: 760-771-4013
FAX: 760-771-4073

DATE: JAN. 27, 2010

CITY OF PALM SPRINGS, CALIFORNIA
PRIVATE PRECISE PAVING, GRADING, DRAINAGE & WET UTILITY IMPROVEMENT PLAN
PALM SPRINGS ANIMAL CARE FACILITY
CONSTRUCTION NOTES & ESTIMATED QUANTITIES / DETAILS
POR. OF NW 1/4 OF NE 1/4 OF SE 1/4 OF SEC. 19, T. 4 S., R. 5 E., S.B.B.& M.

FILE NO. CP 07-24
DWG. NO.
CADD FILE NAME SEE BELOW RIGHT
SHEET 3 OF 11 SHTS.

I:\76100\PG\PG-03.dwg 1/27/10

NOT FOR CONSTRUCTION

PRIVATE PRECISE PAVING, GRADING, DRAINAGE & WET UTILITY IMPROVEMENT PLAN - PALM SPRINGS ANIMAL CARE FACILITY

SWATT | MIERS ARCHITECTS
5845 Doyle Street,
Suite 104
Emeryville, CA 94608
Tel: 510 985 9779
Fax: 510 985 0116
www.swattmiers.com

PALM SPRINGS ANIMAL CARE FACILITY
4575 E. MESQUITE AVE.
PALM SPRINGS, CA 92262

CITY OF PALM SPRINGS
PROJECT NO. CP. 07-24

APN: 680-020-010

Issue

Rev	Date	By	Description
1	01/27/10	BB	ADDENDUM NO. 1

Drawn By BJB
Checked By SCM
Job No. 76100
Issue Date 01-27-10
Scale SEE PLAN

Reference North SEE PLAN
Drawing Title
CONSTRUCTION NOTES & ESTIMATED QUANTITIES / DETAILS

C3
Sheet

These plans, drawings and specifications are the property of Swatt | Miers Architects and shall not be reused in part or in whole without the written permission of the Architect is prohibited.
Copyright 2009 Swatt | Miers Architects