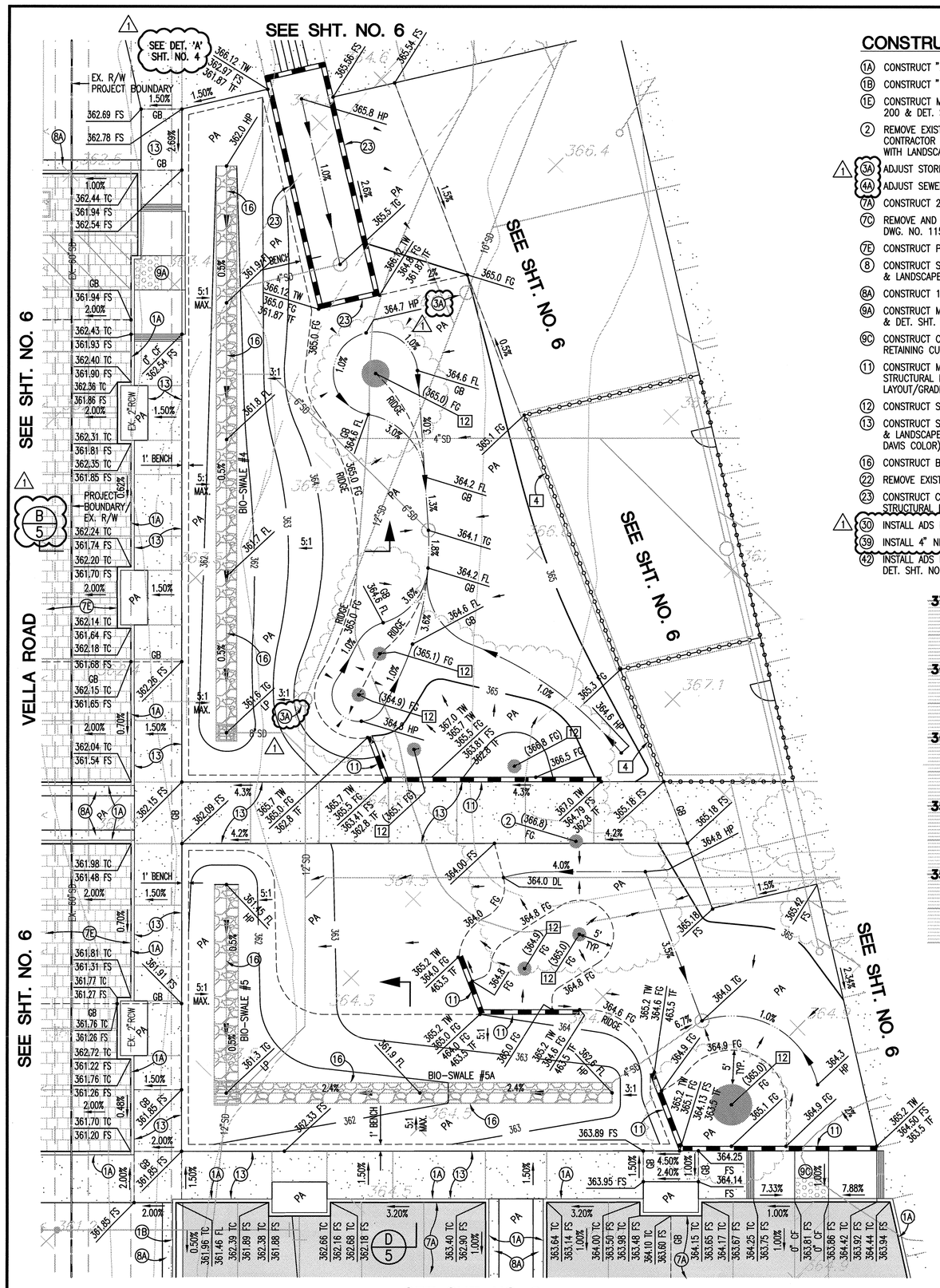

SEE SHT. NO. 6

DETAIL "G"
1"=10'

CONSTRUCTION NOTES

- (1A) CONSTRUCT "A1" CURB ONLY PER CITY STD. DWG. NO. 200
- (1B) CONSTRUCT "B1" CURB & GUTTER PER CITY STD. DWG. NO. 200
- (1E) CONSTRUCT MODIFIED "D1" CROSS GUTTER PER CITY STD. DWG. NO. 200 & DET. SHT. NO. 3
- (2) REMOVE EXISTING TREE PER LANDSCAPE ARCHITECT'S RECOMMENDATIONS; CONTRACTOR TO VERIFY EXISTING LOCATION OF TREE AND VERIFY REMOVAL WITH LANDSCAPE ARCHITECT PRIOR TO CONSTRUCTION
- (3A) ADJUST STORM DRAIN CLEAN OUT TO GRADE
- (4A) ADJUST SEWER CLEAN OUT TO GRADE
- (7A) CONSTRUCT 2.5" AC OVER 4" CMB
- (7C) REMOVE AND REPLACE EXISTING AC OVER CMB IN KIND PER CITY STD. DWG. NO. 115
- (7E) CONSTRUCT PERMEABLE PAVERS PER DET. SHT. NO. 1
- (8) CONSTRUCT SIDEWALK PER CITY STD. DWG. NO. 210 (WIDTH PER PLAN) & & LANDSCAPE ARCHITECT'S PLAN (BROOM FINISH, STANDARD GRAY COLOR)
- (8A) CONSTRUCT 18" WIDE CONCRETE BAND PER DET. SHT. NO. 1
- (9A) CONSTRUCT MODIFIED CURB RAMP CASE "B" PER CITY STD. DWG. NO. 213 & DET. SHT. NO. 3 (TRUNCATED DOMES PER CALTRANS STD. DWG. NO. A88A)
- (9C) CONSTRUCT CURB RAMP CASE "B" PER CITY STD. DWG. NO. 213 (NO RETAINING CURB) (TRUNCATED DOMES PER CALTRANS STD. DWG. NO. A88A)
- (11) CONSTRUCT MASONRY RETAINING WALL PER SEPARATE PERMIT (PER STRUCTURAL ENGINEER'S PLAN (CONTRACTOR TO VERIFY RETAINING WALL LAYOUT/GRADES WITH EXISTING TREES PRIOR TO CONSTRUCTION)
- (12) CONSTRUCT SAWCUT LINE (2' MIN. WHERE APPLICABLE)
- (13) CONSTRUCT SIDEWALK PER CITY STD. DWG. NO. 210 (WIDTH PER PLAN) & & LANDSCAPE ARCHITECT'S PLAN (SAND/ACID FINISH, RUSTIC BROWN #6058 DAWS COLOR)
- (16) CONSTRUCT BIO-SWALE PER DET. SHT. NO. 3
- (22) REMOVE EXISTING CURB & GUTTER
- (23) CONSTRUCT CONCRETE RETAINING WALL PER SEPARATE PERMIT (PER STRUCTURAL ENGINEER'S PLAN)
- (30) INSTALL ADS HDPE N-12 4" STORM DRAIN PIPE
- (39) INSTALL 4" NDS BLACK ATRIUM GRATE (PART NO. 78)
- (42) INSTALL ADS HDPE N-12 4" PERFORATED STORM DRAIN PIPE PER DET. SHT. NO. 3

NOTES

- (4) PROPOSED FENCE PER LANDSCAPE ARCHITECT'S PLAN
- (12) EXISTING TREE(S) PROTECT IN PLACE PER LANDSCAPE ARCHITECT'S RECOMMENDATIONS

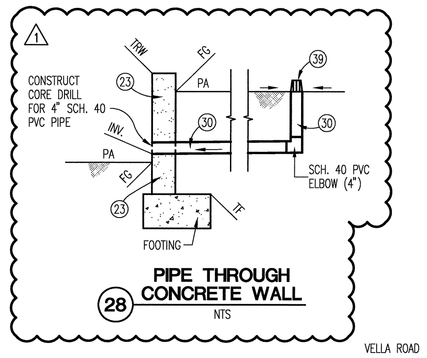

PIPE THROUGH CONCRETE WALL (28)
NTS

*NOTE:
CONTRACTOR TO VERIFY EXISTING LOCATION AND ELEVATION PRIOR TO CONSTRUCTION.

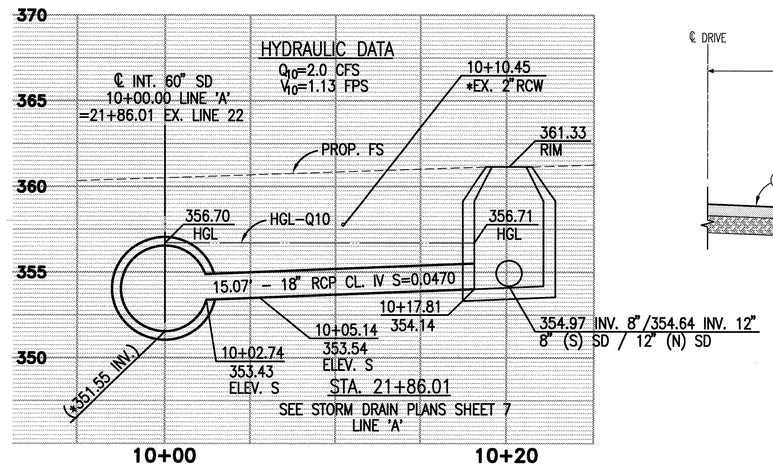

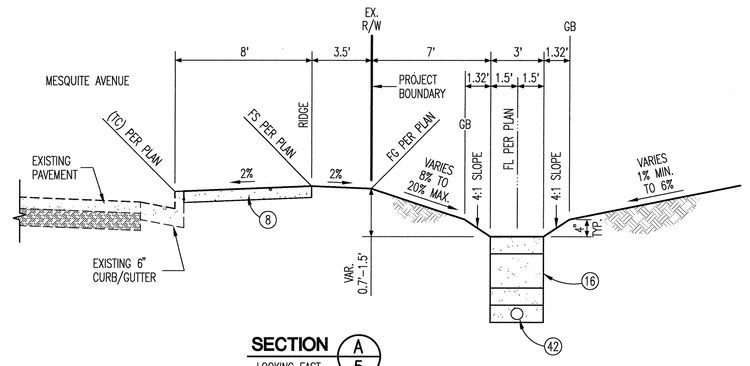

SECTION (A/5)
LOOKING EAST
NTS

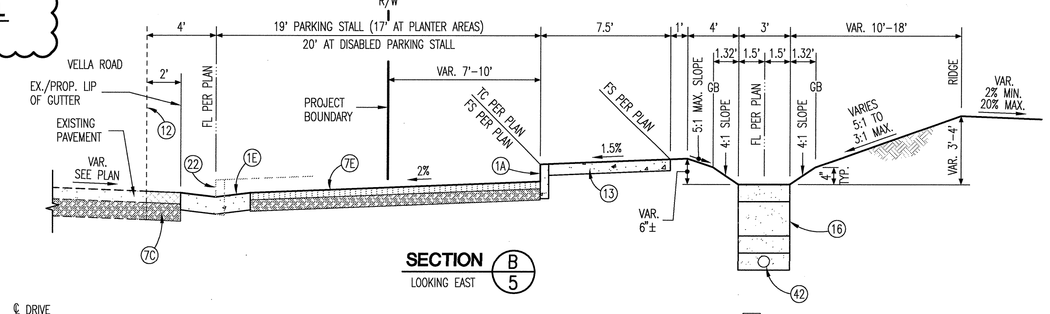

SECTION (B/5)
LOOKING EAST

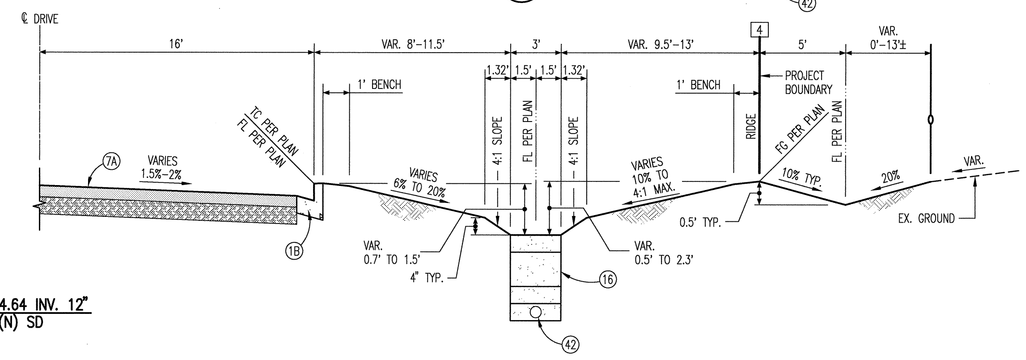

SECTION (C/5)
LOOKING EAST
NTS

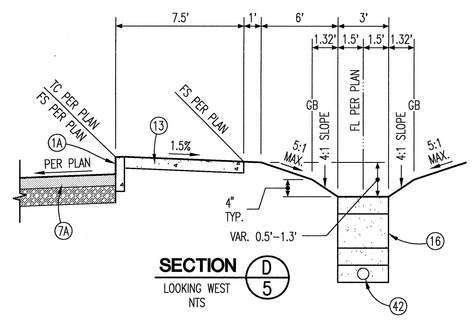

SECTION (D/5)
LOOKING WEST
NTS

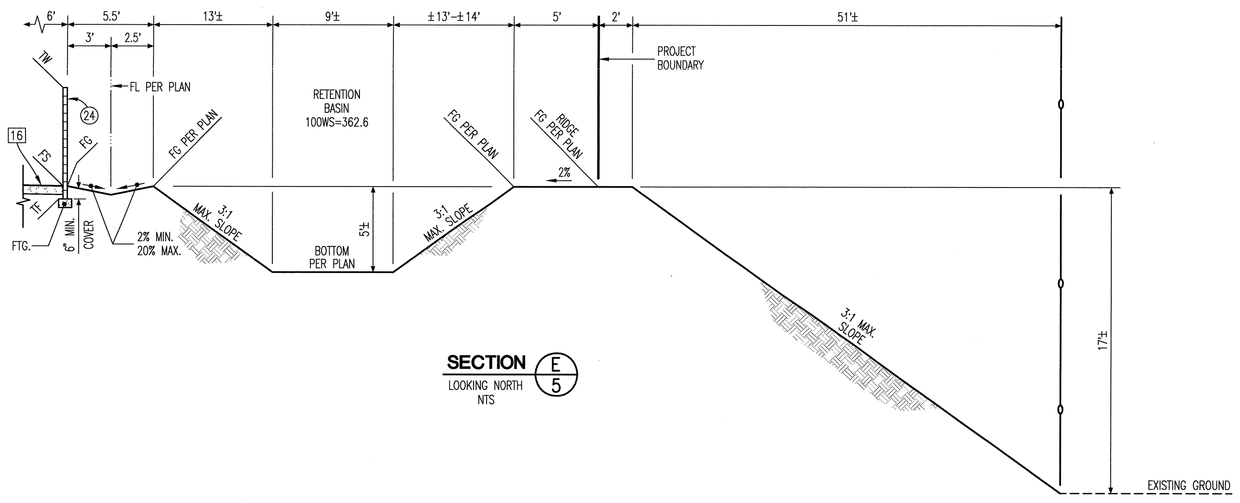

SECTION (E/5)
LOOKING NORTH
NTS

REGISTERED PROFESSIONAL ENGINEER JOHN M. BRUDIN No. 41836 Exp. 3-31-10 CIVIL STATE OF CALIFORNIA

REGISTERED PROFESSIONAL ENGINEER STANLEY C. MORSE No. 20596 Exp. 9-30-11 CIVIL STATE OF CALIFORNIA

BENCH MARK	ELEV.
CANCER	365.700

LOCATION
2 1/2" BRONZE DISC STAMPED "C.P.S. B.M. CANCER RESET 1979", SET IN NORTHEAST CORNER OF WALKWAY AT THE ADMINISTRATION BUILDING OF THE WASTE WATER TREATMENT PLANT.

NO.	REVISION	APPROVED	DATE

CITY CHECK — DATE

REVIEWED BY: JOHN M. BRUDIN — R.C.E. NO. / EXP. DATE 41836 3/31/10 — DATE

APPROVED BY: DAVID J. BARAKIAN — R.C.E. NO. / EXP. DATE 28931 3/31/11 — DATE

PREPARED UNDER THE SUPERVISION OF: STANLEY C. MORSE — R.C.E. NO. / EXP. DATE 20596 9/30/11 — DATE 1/27/10

MDS CONSULTING — MORSE SCHULTZ — PLANNERS ENGINEERS SURVEYORS
78-900 Avenue 47, Suite 208
La Quinta, CA 92253
Voice: 760-771-4013
FAX: 760-771-4073
DATE: JAN. 27, 2010

CITY OF PALM SPRINGS, CALIFORNIA
PRIVATE PRECISE PAVING, GRADING, DRAINAGE & WET UTILITY IMPROVEMENT PLAN
PALM SPRINGS ANIMAL CARE FACILITY
DETAILS
POR. OF NW 1/4 OF NE 1/4 OF SE 1/4 OF SEC. 19, T. 4 S., R. 5 E., S.B.B.& M.

FILE NO. CP 07-24 — DWG. NO. — CADD FILE NAME SEE BELOW RIGHT — SHEET 5 OF 11 SHTS.

I:\76100\PC\PG-05.dwg 1/27/10

PRIVATE PRECISE PAVING, GRADING, DRAINAGE & WET UTILITY IMPROVEMENT PLAN - PALM SPRINGS ANIMAL CARE FACILITY

NOT FOR CONSTRUCTION

SWATT | MIERS ARCHITECTS
5845 Doyle Street,
Suite 104
Emeryville, CA 94608
Tel: 510 985 9779
Fax: 510 985 0116
www.swattmiers.com

PALM SPRINGS ANIMAL CARE FACILITY
4575 E. MESQUITE AVE.
PALM SPRINGS, CA 92262

CITY OF PALM SPRINGS
PROJECT NO. CP. 07-24

APN: 680-020-010

Issue

Rev	Date	By	Description
1	01/27/10	BB	ADDENDUM NO. 1

Drawn By BJB
Checked By SCM
Job No. 76100
Issue Date 01-27-10
Scale SEE PLAN

Reference North SEE PLAN
Drawing Title
DETAILS

C5
Sheet

These plans, drawings and specifications are the property of Swatt | Miers Architects and any use and/or reuse thereof in part or in whole without the written permission of the Architect is prohibited.
Copyright 2009 Swatt | Miers Architects